RoHS Compliant

Rev.	Decription/Eco	Date	By

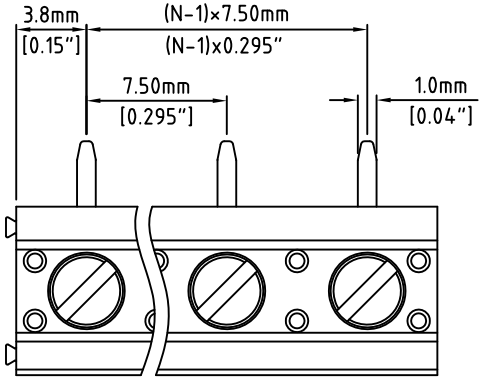

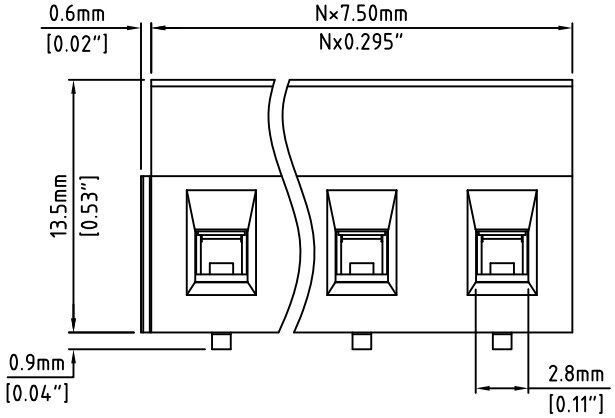

N=Number of Positions

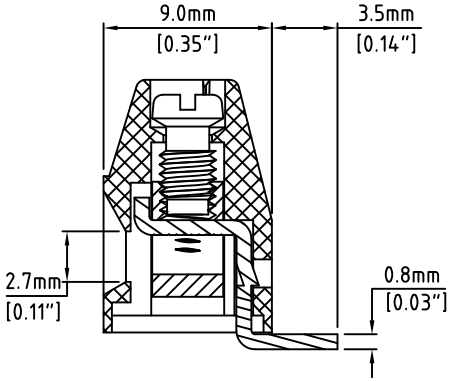

Material:	
Contact Block:	Brass, Ni Plated
Contact Solder Pin:	Brass, Tin Plated
Screw:	M3.0, Steel, Zinc Plated, "-" slotted
Insulating Body:	Polyamide, UL94V-0, Green
Electrical	
Voltage Rating:	300 VAC
Current rating:	16 AMPS
Withstand Voltage:	1500 VAC, Test time 60 sec
Wire Range:	12-28 AWG
Mechanical	
Torque:	3.5 lbs-in. Max
Operating Temperature:	-40°C to +115°C -40°F to +239°F
Soldering Temperature:	260°C, 500°F for 5 seconds
Safety Approval:	C US

Part Number Configuration.

EB755-XX-500

Number of Positions — Color Option 5-Green

(Other Color Options Available
Please consult Factory)

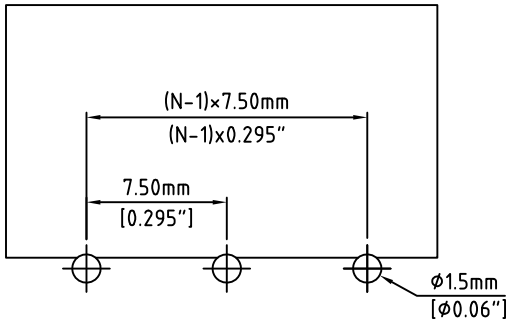

P.C.B. Layout

Max Number of Positions = 16

UNLESS OTHERWISE SPECIFIED BREAK ALL SHARP EDGES AND DEBURR ALL HOLES

TITLE: 7.50mm SPACING, CAGE CLAMP BLOCK

LIMITS: UNLESS OTHERWISED SPECIFIED
HUND.±.02 FRACT.±1/64
THOU.±.005 ANGLE±1°

SCALE

THIS IS A CONFIDENTIAL DRAWING AND MUSTBE TREATED AS SUCH. NO DISTRIBUTION IS ALLOWED WITHOUT WRITTEN APPROVAL BY EBY ELECTRO INC.

EBY Electro Inc.
PLAINVIEW, NY 11803

IMPORTANT DISCLAIMER: All information provided on this print is for reference. Always perform your own tests and acquire samples and further information to determine product suitability. While we make effort to provide accurate information, we cannot be responsible for errors either of omission or typographical. EBY Electro, Inc. assumes no responsibility for the use or suitability of any product. All products and specifications are subject to change without prior written notice.

METRIC LIMITS
ONE PLACE ±0.3
TWO PLACES ±0.10
ANGLE ± 1°

DRAWN JM DATE 04/02/07
CHECKED DATE
APPROVED DATE

SIZE A

DRAWING NUMBER: EB755-XX-500

REV.